# Engine Oil

## Checking Engine Oil

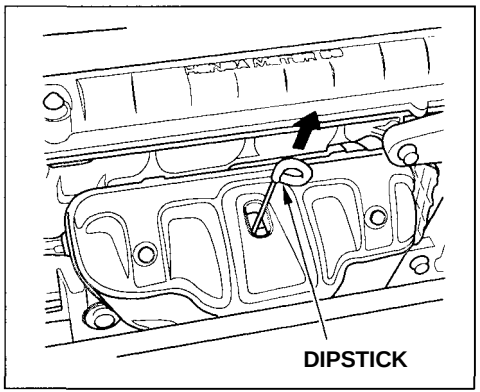


Check the engine oil a couple of minutes after shutting off the engine. This will allow the oil to drain down to the bottom of the engine. Make sure the car is parked on level ground.

1. Pull out the dipstick (orange loop) and wipe it with a cloth or paper towel.

2. Insert it all the way back in its tube.

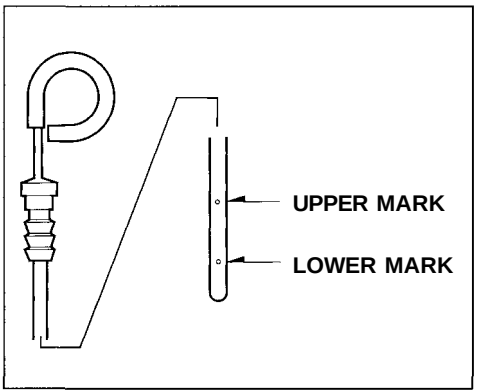


3. Pull it out again and look at the oil level at the end of the dipstick. If it is between the upper and lower marks, the level is correct. Add oil if the level is at or below the lower mark.

## Adding Oil

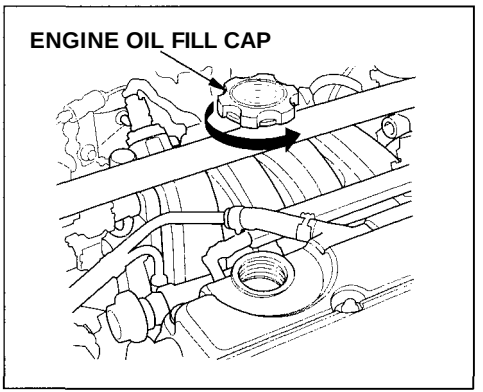


To add oil, unscrew and remove the engine oil fill cap on top of the valve cover. Pour in the oil, and replace the engine oil fill cap. Tighten it securely. Wait a few minutes and recheck the oil level. Do not fill above the upper mark; you could damage the engine.

## Recommended Oil

Oil is a major contributor to your engine's performance and longevity. Always use a premium-grade detergent oil.

You can determine an oil's SAE viscosity and Service Classification from the API Service label on the oil container.

A fuel-efficient oil is recommended for your Acura. This is shown on the API Service label by the words "Energy Conserving II." This oil is formulated to help your engine use less fuel.

The API Service label also tells you the service classification of the oil. Always use an oil that says "API Service SH." This service rating may also include other designations, such as CD. These additional classifications are not a problem, as long as the label also carries the SH classification. An oil that is only classified SF is not recommended.

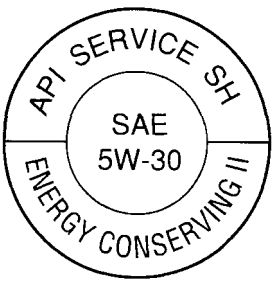


API SERVICE LABEL

The oil container may also display the API Certification mark shown below. Make sure it says "For Gasoline Engines."


API CERTIFICATION MARK

*CONTINUED*

# Engine Oil

The SAE numbers tell you the oil's viscosity or weight. Select the oil for your car according to this chart.

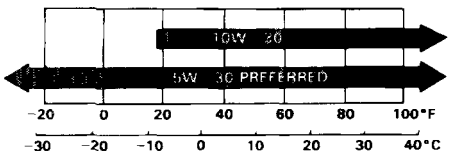


**Ambient Temperature**

An oil with a viscosity of 5W-30 is preferred for improved fuel economy and year-round protection in your Acura. You may use a 10W-30 oil if the temperature in your area never goes below 20°F (—7°C).

## Synthetic Oil

You may use a synthetic motor oil if it meets the same requirements given for conventional motor oil; energy conserving, a service classification of SH, and the proper weight as shown on the chart. When using synthetic oil, you must follow the oil and filter change intervals given in the maintenance schedule.

## Additives

Your Acura does not need any oil additives. Purchasing additives for the engine or transmission will not increase your car's performance or longevity. It only increases the cost of operating your car.

## Oil and Filter Changes

Always change the oil and filter according to the time and distance recommendations in the maintenance schedule. The oil and filter collect contaminants that can damage your engine if they are not removed regularly.

Changing the oil and filter requires special tools and access from underneath the car. The car should be raised on a service station-type hydraulic lift for this service. Unless you have the knowledge and proper equipment, you should have this maintenance done by a skilled mechanic.

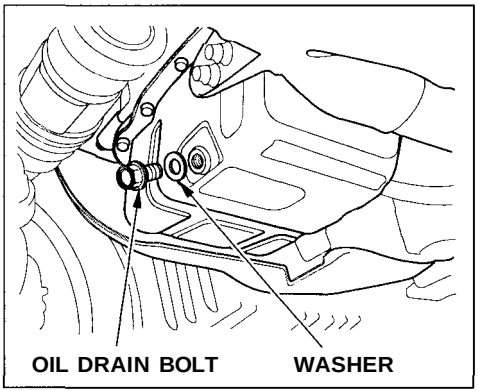


1. Run the engine until it reaches normal operating temperature, then shut it off.

2. Open the hood and remove the engine oil fill cap. Remove the oil drain bolt from the bottom of the engine. Drain the oil into an appropriate container.

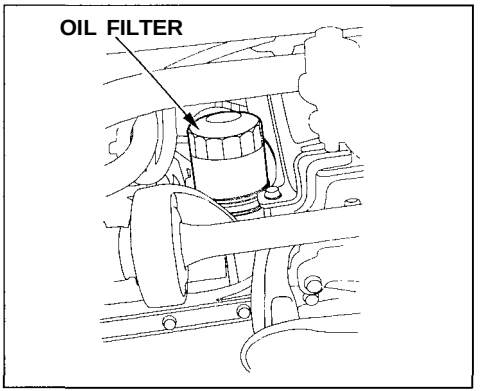


3. Remove the oil filter and let the remaining oil drain. A special wrench (available from your Acura dealer) is required to remove the filter.

4. Install a new oil filter according to instructions that come with it.

*CONTINUED*

# Engine Oil

5. Put a new washer on the drain bolt, then reinstall the drain bolt. Tighten it to:
   44 N·m (4.5 kgf·m , 33 lbf·ft)

6. Refill the engine with the recommended oil.
   Engine oil change capacity (including filter):

   (RS, LS, LS Special)
   3.8 ℓ(4.0 US qt, 3.3 Imp qt)

   (GS-R)
   4.0 ℓ(4.2 US qt, 3.5 Imp qt)

7. Replace the engine oil fill cap. Start the engine. The oil pressure indicator light should go out within five seconds. If it does not, turn off the engine and reinspect your work.

8. Let the engine run for several minutes and check the drain bolt and oil filter for leaks.

9. Turn off the engine, let it sit for several minutes, then check the oil level. If necessary, add oil to bring the level to the upper mark on the dipstick.

**NOTICE**

*If you change your own oil, please dispose of the used oil properly. Put it in a sealed container and take it to a recycling center. Do not discard it in a trash bin or dump it on the ground.*

## Checking the Engine Coolant Level

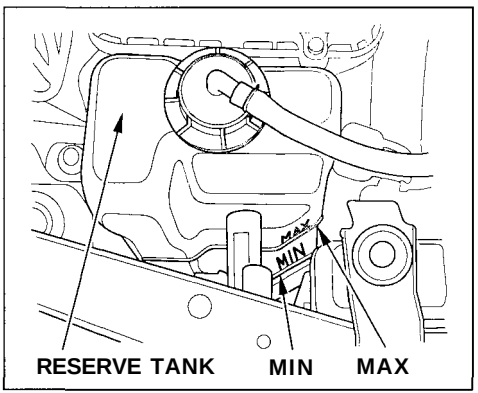


Check the level of the engine coolant by looking at the radiator reserve tank next to the air cleaner housing. If the coolant level in the reserve tank is at or below the MIN line, add coolant to bring it up to the MAX line. Inspect the cooling system for leaks. This coolant should always be a mixture of 50% antifreeze and 50% water. Never add straight antifreeze or plain water.

Always use Genuine Honda Anti-freeze/Coolant. The cooling system contains many aluminum components that can corrode if an improper antifreeze is used. Some antifreeze, even though labeled as safe for aluminum parts, may not provide adequate protection.

## Adding Engine Coolant

If the reserve tank is completely empty, you should also check the coolant level in the radiator.

**⚠ WARNING**

Removing the radiator cap while the engine is hot can cause the coolant to spray out, seriously scalding you.

Always let the engine and radiator cool down before removing the radiator cap.

*CONTINUED*

# Cooling System

1. Make sure the engine and radiator are cool.

2. Turn the radiator cap counter-clockwise, without pressing down on it, until it stops. This relieves any pressure remaining in the cooling system.

3. Remove the radiator cap by pushing down and turning counterclockwise.

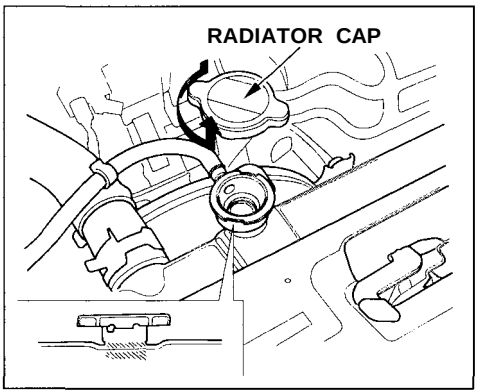


4. The coolant level should be up to the base of the filler neck. Add coolant if it is low.

5. Put the radiator cap back on. Tighten it fully.

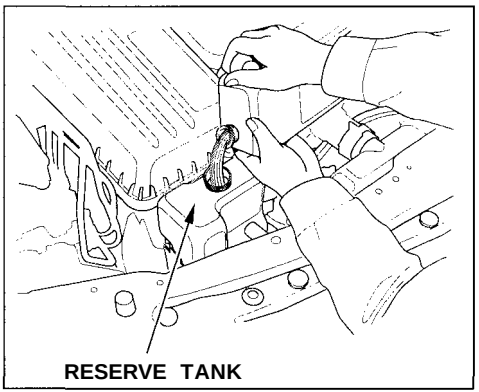


6. Pour coolant into the reserve tank. Fill it to halfway between the MAX and MIN marks. Put the cap back on the reserve tank.

Do not add any rust inhibitors or other additives to your car's cooling system. They may not be compatible with the coolant or engine components.

**Replacing Engine Coolant**
The cooling system should be completely drained and refilled with new coolant according to the time and distance recommendations in the maintenance schedule. Only use recommended antifreeze.

Draining the coolant requires access to the underside of the car. Unless you have the tools and knowledge, you should have this maintenance done by a skilled mechanic.

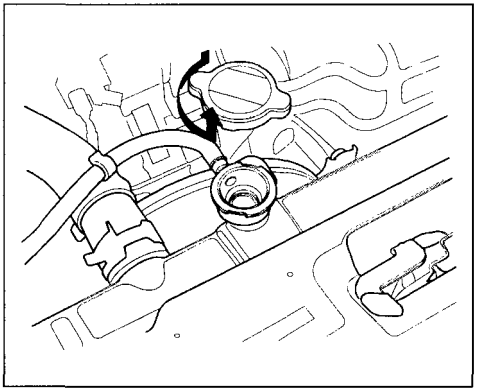

1. Slide the heater temperature control lever to maximum heat. Open the hood. Make sure the engine and radiator are cool to the touch.

2. Remove the radiator cap.

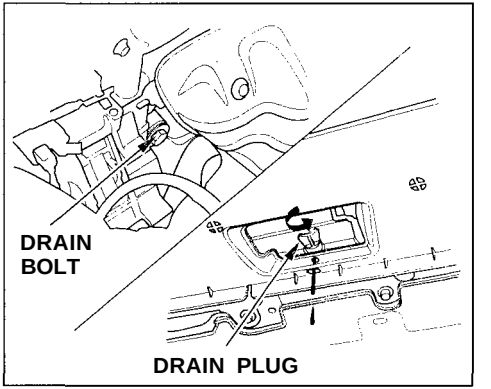


3. Loosen the drain plug on the bottom of the radiator. The coolant will drain through the splash guard. Remove the drain bolt from the engine block.

*CONTINUED*

# Cooling System

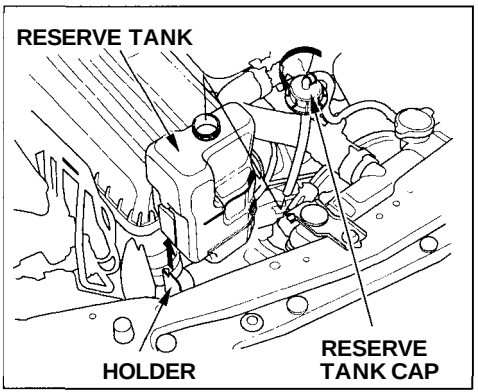


4. Remove the reserve tank from its holder by pulling it straight up. Drain the coolant, then put the tank back in its holder.

5. When the coolant stops draining, tighten the drain plug in the bottom of the radiator. Apply non-hardening sealant to the drain bolt threads and reinstall the bolt in the engine block. Tighten it securely.

6. Mix the recommended antifreeze with an equal amount of purified or distilled water in a clean container. The cooling system capacity is:

*With manual transmission:*
(RS, LS, LS Special)
4.4 ℓ (1.16 US gal, 0.97 Imp gal)

(GS-R)
4.7 ℓ (1.24 US gal, 1.03 Imp gal)

*With automatic transmission:*
4.7 ℓ (1.24 US gal, 1.03 Imp gal)

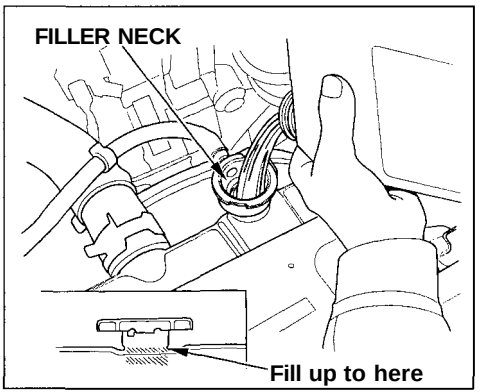


7. Pour coolant into the radiator up to the base of the filler neck.

Put the cap on the radiator, only tighten it to the first stop. Start the engine and let it run until it warms up (the radiator cooling fan comes on at least twice).

**⚠ WARNING**

Removing the radiator cap while the engine is hot can cause the coolant to spray out, seriously scalding you.

Always let the engine and radiator cool down before removing the radiator cap.

9. Turn off the engine. Check the level in the radiator, add coolant if needed. Install the radiator cap, tighten it fully.

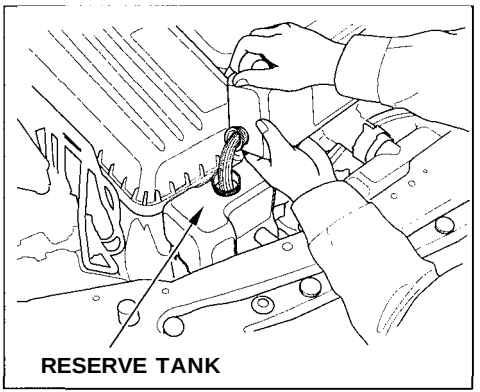


10. Fill the reserve tank to the MAX mark. Install the reserve tank cap.