⚠WARNING

Do not attempt to change a tire unless the car is on firm, level ground and well out of the flow of traffic.

Park the car on a firm, level surface, apply the parking brake, turn on the hazard warning switch and put the transmission in gear (Park for automatic).

1. Remove the jack, lug wrench/jack handle and jack handle extension (in the tool bag) from the location shown.

NOTE:

To remove the jack, release its tension against the mount by turning the screw counterclockwise.

2. Remove the spare tire.
3. Place blocks in front and back of the wheel diagonally opposite the tire you are changing.

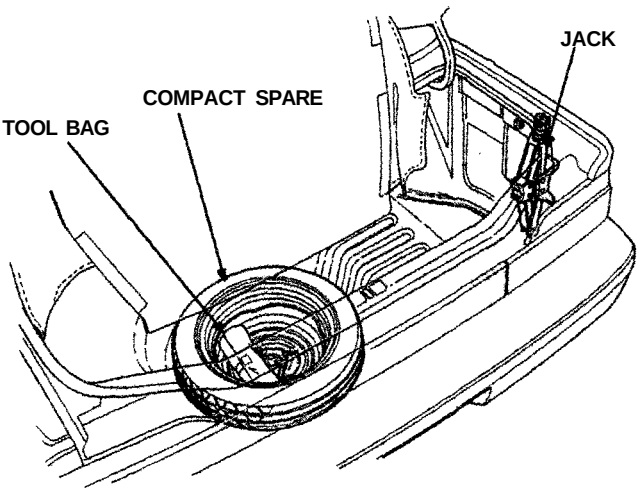

(cont'd)

Changing a Flat Tire (cont'd)

4. (2,0 Si)
Remove the center cap from the wheel cover by turning the lock to 90°.

(Si)
Remove the center cap from the wheel by prying it out with a common flat screwdriver (not provided in the tool bag).

(2.0 Si)

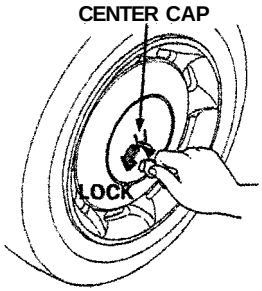

(Si)

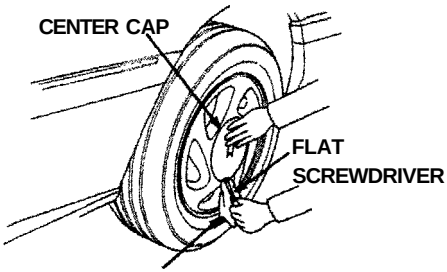

CAUTION:
(On the Si model)
Hold the center cap with your hand then pry it off using a rag to protect the cap and the wheel.

RAG

5. Use the lug wrench to loosen the wheel lug nuts counterclockwise one-half turn.

⚠WARNING

Follow tire changing preparations and procedures carefully to reduce the possibility of injury. The jack is designed for changing tires only. STAND CLEAR, DO NOT get under the car and DO NOT run the engine when the car is supported only by the jack.

6. Place the jack under the jack point nearest the wheel you are removing; align the jack head so the car frame will fit in the recess as you raise the jack.

⚠WARNING

To reduce the possibility of injury, be sure to use the jack provided with the car and the correct jacking points; never use any other part of the car for jack support.

7. Set the jack handle extension in the connector on the end of the jack and install the lug wrench/jack handle. Turn the lug wrench/ jack handle clockwise until the tire is slightly off the ground.

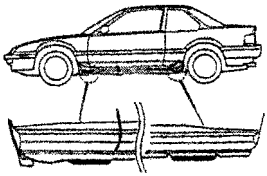

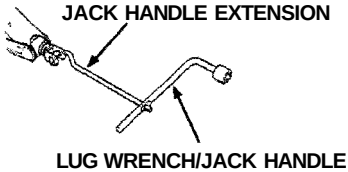

8. Remove the lug nuts, wheel cover and wheel.
(Wheel cover is equipped with 2.0 Si model)

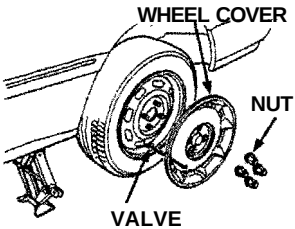

9. Everytime you install the wheel on the brake hub, use a rag to wipe any dirt off the mounting surface of the hub and the wheel. This will assure a tight, even contact between the wheel and hub.

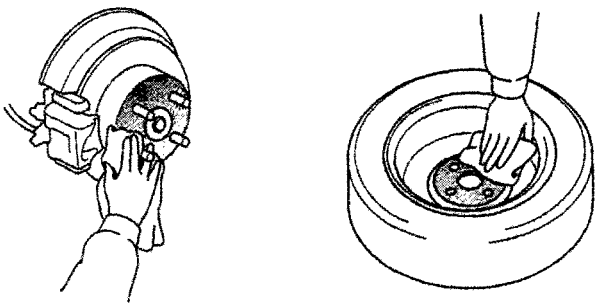

10. Install the spare, and lug nuts hand tight.

(cont'd)

Changing a Flat Tire (cont'd)

11. Lower the car, remove the jack, then tighten the lug nuts securely in an "X" pattern as shown.

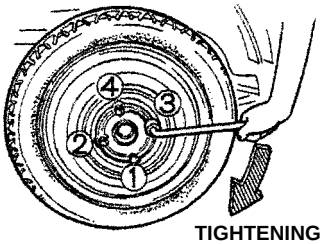

TIGHTENING TORQUE
110 N.m (11 kg-m, 80 lb-ft)

12. Tighten the lug nuts to the recommended torque is:
    110 N.m (11 kg-m,80 lb-ft)
    If a torque wrench was not used, ask an authorized Honda dealer to verify the torque as soon as possible.
13. Stow the damaged tire in the trunk.
14. Repair or replace the damaged tire as soon as you can, reinstall it in its original position, then put the spare back in the car.

CAUTION:
Always stow the jack, tools and tire securely to prevent them from becoming dangerous projectiles in an accident.

15. Secure the tire and the spacer as shown in the illustration.
    (Except for Si with Anti-lock Brake System)

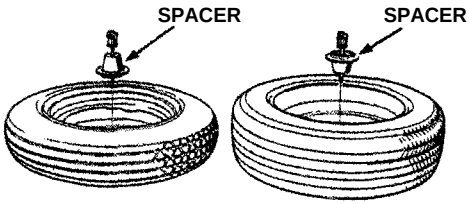

COMPACT SPARE **DAMAGED TIRE**

Jump Starting

To start a car with a dead battery, use another battery of the same voltage, and the proper jumper cables.

⚠WARNING

- **Procedures other than those below could cause injury or damage from battery acid spray, explosion or charging system overload.**
- **Never connect the jumper cable directly to the negative post of the "dead" battery.**
- **Never allow the two cars to touch each other.**
- **Never allow the jumper cable clamps to touch each other.**
- **Never lean over the battery when making connections.**
- **Never attempt to jump start a vehicle with a frozen battery. The battery could rupture and explode. If you suspect a frozen battery, remove the vent caps and check the fluid. If there seems to be no fluid, or if you see ice, do not attempt a jump start until the fluid thaws.**

CAUTION:

If jumper cables are connected backwards, the car's mam fuse may blow.

1. Turn off all lights, heater and other electrical loads, set the parking brake, and shift the transmission to Neutral or Park.
2. Use one cable to connect the positive terminal of the booster battery to the positive terminal of the "dead" battery.

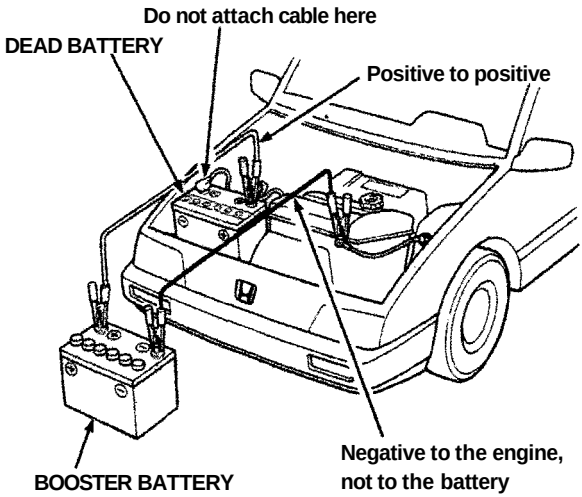

(cont'd)

Jump Starting (cont'd)

3. Use the other cable to connect the negative terminal of the booster battery to the engine at the ground cable as shown,
4. To remove the cables, reverse the above procedures exactly.

⚠WARNING

DO NOT push or tow a car to start it. The forward surge when the engine starts could cause a collision. Also, under some conditions, the catalytic converter could be damaged. A car equipped with an automatic transmission cannot be started by pushing or towing.

NOTE:

(Si with Anti-lock Brake System)

After jump-starting the car, there is a possibility that the Anti-lock brake system warning light may come on due to insufficient battery voltage. After the battery is sufficiently recharged and the engine is turned off and restarted, the Anti-lock brake system warning light should indicate that the Anti-lock brake system is OK, by coming on for a few seconds each time the engine is started. If the light remains on after recharging, have it checked by a Honda dealer.

Towing

If towing is necessary, contact a professional towing service. Your authorized Honda dealer can assist you with detailed towing instructions.

⚠WARNING

Never use tow chains or rope to tow a car; your ability to safely control the car may be adversely affected.

We recommend the following:
Flat Bed Equipment — Entire car is winched on a flat bed vehicle. This is the best way of transporting your Honda.
Wheel Lift Type — Tow with the front wheels off the ground.

If the car can only be towed with the front wheels on the ground: make sure the transmission is full of fluid (see pages 88 — 89) and tow with the transmission in neutral (N) and the ignition key in the I position.

CAUTION:

To avoid serious damage on automatic transmission cars, first start the engine and shift to D, then to N and shut the engine off. if the engine does not run or the transmission cannot be shifted while the engine is running, the car must be transported on flat bed equipment.

Check local regulations for towing.

CAUTION:

- **Do not exceed 35 mph (55 km/h) or tow for distances of more than 50 miles (80 km).**
  if a sling type tow is used, the tow truck driver should position wood spacer blocks between your car's frame and the chains and lift straps to avoid damaging the bumper and the body.
- **Do not use the bumpers to lift the car or to support the car's weight while towing.**
- **When towing a car with 4WS even with the front wheels off the ground, turn the wheels straight ahead and tie the steering wheel in place.**

If Your Car Gets Stuck

If your car gets stuck in sand, mud, or snow, call a professional towing service for assistance in getting your car out.

CAUTION:

- **Do not rev up the engine and allow the wheels to spin freely at high speed. Severe transmission damage may result if the wheels are allowed to spin for more than a few seconds.**
- **DO NOT try to free a car with automatic transmission from snow, etc. by rocking the car alternately between forward and reverse gears. Severe transmission damage may result from shifting into gear with the wheels moving.**

Headlight Motors

Proceed as follows if either headlight motor fails to operate:

1. Lift the hood and remove the cover from the engine compartment fuse box.

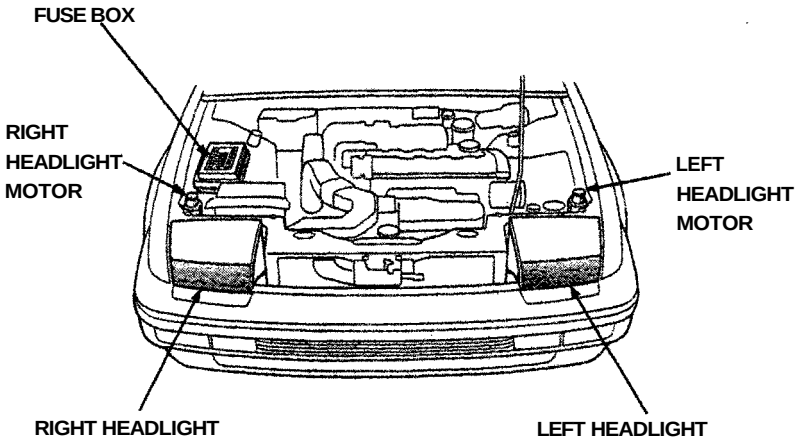

2. Use the label on the fuse box cover to locate the fuse for the headlight motor that doesn't work. Remove the fuse with the fuse remover located in the fuse box under the dashboard.

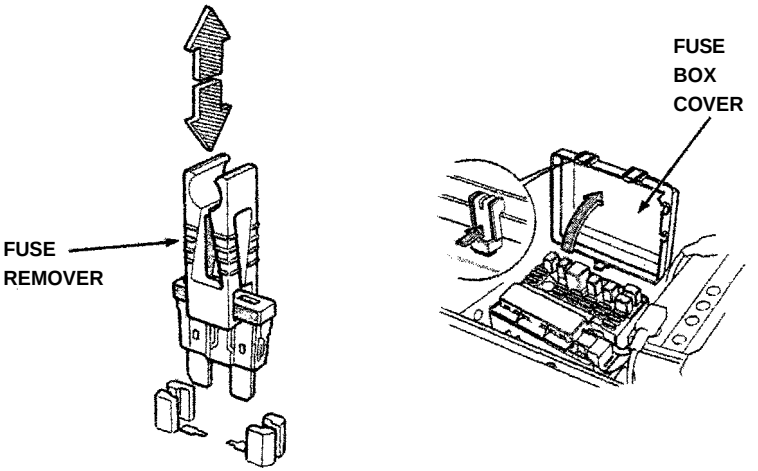

(cont'd)

Headlight Motors (cont'd)

3. If the fuse has blown, replacing it with a new fuse of the same amperage should allow the motor to work,
   However, if the fuse hasn't blown, or if a new fuse did not solve the problem, remove the fuse and operate the headlight motor manually.

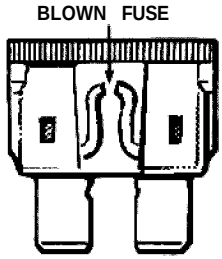

CAUTION:

Always remove the fuse before manually operating a headlight motor, otherwise the motor may suddenly activate.

4. Remove the cap from the top of the headlight motor, then turn the knob in the direction of the arrow (clockwise) until the headlight is as far up or down as it will go.

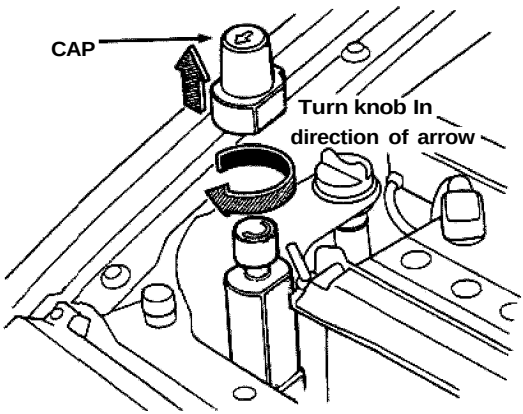

NOTE:

If foreign matter is the cause of the motor malfunction, it can usually be dislodged by turning the knob counterclockwise.

5. Replace the cap properly.
6. Reinstall the fuse and fuse box cover and have the headlight motor inspected at the earliest opportunity.